Datasheet RTBSS-111.250/05

Articlenumber: ZN112525

Switch cabinet thermostat, 0...60...°C, NO contact

The device does not require any supply voltage.

Ambient temperature, lower value	0 °C
Ambient temperature, upper value	60 °C
Average power consumption	0 W
Bearing temperature, lower value	-20 °C
Bearing temperature, upper value	80 °C
Colour	Grey
Connection cross-section	0,5 mm² - 2,5 mm²
Control range, lower value	0 °C
Control range, upper value	60 °C
Cooling control function	Yes
Depth	46 mm
Electric connection	Screw terminals
External setting	Yes
Heating control function	No
Height	64 mm
Housing material	Plastic PA6
Maximum air humidity (non-condensing)	95 % r.H
Maximum switching current	10 (2) A/VAC, max. 30 W/VDC
Maximum switching voltage	230 V AC, 50 Hz

ALRE-IT Regeltechnik GmbH
Richard-Tauber-Damm 10
D-12277 Berlin

Telefon: +49 30 399 84- 0 Telefax: +49 30 391 70 05 E-Mail: mail@alre.de www.alre.de

Medium	Air, not aggressive
Minimum switching voltage	24 V AC / 50 Hz, 24 V DC
Mounting / attachment	Surface mounting or standard rail
Number of control ranges	1
Number of outputs	1
Operating voltage	None
Operation	Rotary knob
Protection class	0, determined by the assembly location
RAL colour number (similar)	7035
Safety and EMC	In accordance with DIN EN 60730
Scale	Degree Celsius
Sensor element	Bimetal
Surface properties	Matt
Switching contact	Normally open contact
Switching difference	Approx. 4….7 K
Switching element	Bimetal contact
Switching power	2300 W
Test mark approval	UL, VDE
Type of protection	IP30
Width	37 mm

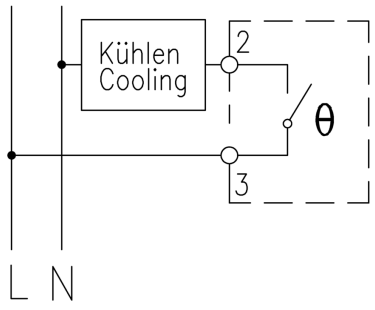

ALRE-IT Regeltechnik GmbH
Richard-Tauber-Damm 10
D-12277 Berlin
Telefon: +49 30 399 84- 0
Telefax: +49 30 391 70 05
E-Mail: mail@alre.de
www.alre.de