Datasheet HTRRUU210.021#21/7/V2

Articlenumber: UN060011

Room/underfloor temperature controller with timer, flush-mounted, alre frame, cover 50x50mm, pure white, gloss, remote sensor NTC2K for floor

Actual temperature display	No
Adaptive heating time start	Yes
Ambient temperature, lower value	0 °C
Ambient temperature, upper value	35 °C
Bearing temperature, lower value	-20 °C
Bearing temperature, upper value	70 °C
Clock type	Day/week
Clock version	Digital
Colour	Pure white
Control behaviour	2-point or PI-PWM
Control range, lower value	5 °C
Control range, upper value	42 °C
Depth	85 mm
Design	Berlin UP
Display	Yes
Display type	Illuminated, graphic display
Electric connection	Screwed plug-in terminals
Energy efficiency class	I or IV
External setting	Yes

ALRE-IT Regeltechnik GmbH
Richard-Tauber-Damm 10
D-12277 Berlin
Telefon: +49 30 399 84- 0
Telefax: +49 30 391 70 05
E-Mail: mail@alre.de
www.alre.de

Heating control function	Yes
Height	46 mm
Housing material	Plastic ABS, PC, PMMA
Maximum air humidity (non-condensing)	95 % r.H
Maximum switching current	10 (2) A
Maximum switching voltage	230 V AC, 50 Hz
Medium	Air, not aggressive
Minimum switching voltage	230 V AC / 50 Hz
Mounting / attachment	Flush mounting (deep socket recommended)
Number of control ranges	1
Number of outputs	1
Number of outputs, heating	1
Number of switching programs	7
Operating voltage	230 V AC / 50 Hz
Operation	Touch-sensitive buttons
Output signal	Switching (230 V AC, 50 Hz)
Party function	Yes
Potential free switching contact	No
Power reserve	Approx. 5 days
Protection class	II, following appropriate mounting
RAL colour number (similar)	9010
Safety and EMC	In accordance with DIN EN 60730
Sensor element	NTC internal, NTC external for floor
Sensor external	Yes
Shortest switching time	15 min
Surface properties	Gloss
Switching contact	Normally open contact
Switching difference	< 1 K
Switching difference, can be adjusted	No
Switching element	Relay
Switching power	2300 W
Temperature controller version	Room therm. and/or underfl. temp. contr.

Test mark approval	CE, VDE
Type of protection	IP30
Valve protection function	Yes
Width	81 mm
With explosion protection	No

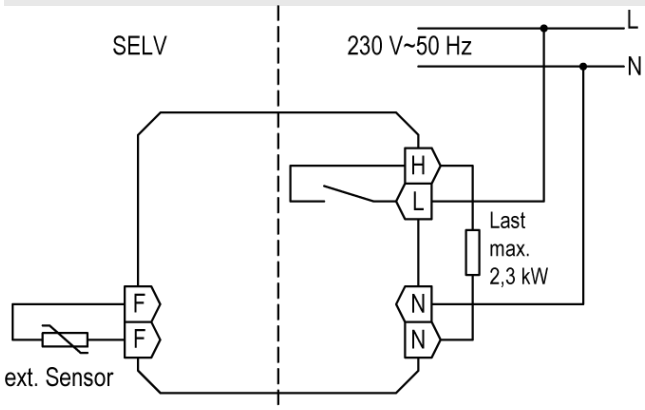

ALRE-IT Regeltechnik GmbH
Richard-Tauber-Damm 10
D-12277 Berlin
Telefon: +49 30 399 84- 0
Telefax: +49 30 391 70 05
E-Mail: mail@alre.de
www.alre.de